Measurements International

Metrology is Our Science, Accuracy is Our Business™

8000B/8001B AUTOMATED POTENTIOMETER BINARY VOLTAGE DIVIDER

Developed & designed by metrologists for metrologists & calibration technicians

Featuring

- Intrinsically Accurate Self-Calibrating Ratio Divider
- Best Accuracy < 0.05 ppm
- Built-in 20-Channel Scanner
- Arbitrary Voltages from 1 mV to 1200 V
- Bi-polar Voltage Measurements
- Calibration of Fluke 5700A/5720A
- Calibration of 3458A and 8508A
- Calibration of Voltage Ratio Dividers (F752A, MI 1340A, G7520)
- Linearity Calibration of Digital Volt Meters (DVM)
- Traceability to 10 V Zener Reference

Overview

The Automated Voltage Divider System is a highly versatile, accurate, self-balancing ratio instrument that meets laboratory requirements for scaling between a Josephson-calibrated 10 V reference and any voltage between 1 mV to 1200 V. Automatic self-calibration ensures ratios to nine significant digits with linearity deviations of < 0.02 ppm. The Automated Voltage Divider System consists of the MI model 8000B Binary Voltage Divider with a voltage range from 1 mV to 10 V and the model 8001B with a range from 10 V to 1200 V. A 10 V source, a detector and a 10 V reference for traceability completes the system. The model 8000B with its “built-in” 20-channel scanner can be used to measure up to twenty 10 voltage references automatically. The model 8001B has 5 input ranges. Both units are controlled via the MI 8000B operating software for performing automatic measurements.

Feature	Benefit
Automated self-calibration.	Does not require sending out for calibration.
Bi-polar voltage measurements.	Allows for automatic + and - voltage measurements against + 10 V reference.
Built-in 20-channel scanner.	Allows for automation of multiple UUT’s without connection changes to minimize thermal effects.
Standard cell protection.	Protects references against accidentally shorting or loading.
Calibration of 57XXA.	Automated characterization of Fluke 5700A/5720A/5703A voltage output.
Calibration of DMM’s.	Can characterize the Voltage Linearity of Reference Multimeters like 3458A and 85X8A.
1 mV to 1200 V DC range.	Enough range to calibrate all voltage calibrators without reconfiguring connections.
Voltage maintenance.	Ideally suited to calibrate and intercompare 10 V Zener references.
Low uncertainties.	8000B – 0.05×10^{-6} for 10 V vs. 10 V measurements. 8001B – 1×10^{-6} for up to 1200 V.

8000B/8001B AUTOMATED POTENTIOMETER BINARY VOLTAGE DIVIDER

The Automated DC Voltage Measurement System was developed to address the increasing demand for automated calibration of the DC voltage function on precision multifunction calibrators and DVMs, as well as verifying the linearity verification of the long scale DVM's. This allows the user to perform measurements up to ± 10 V with the 8000B and extend it to ± 1200 V when the 8001B extender is used.

The fully documented calibration of bipolar voltages at the output of the calibrator is traceable to the laboratory's 10 V reference standard.

Model 8000B Binary Voltage Divider (BVD)

The 25-bit voltage divider is entirely passive. It consists of an improved 13-bit self-checking Cutkosky divider terminated by an 8 ½ digit DVM. Thus the higher-order Cutkosky divider provides the composite divider with the requisite accuracy, while the 8 ½ digit DVM extends its resolution without increasing its output resistance. Switching is effected by latching relays, simply controlled and monitored by a microprocessor which also interfaces to the IEEE-488 bus. The two main system operations, auto-calibration and auto-balancing ratio measurement, are designed to be software-driven by the desktop computer.

This makes an extremely versatile system that may be tailored for the experimental investigation of systematic errors as well as for other customized applications. The BVD requires a 10 Volt source, a DVM detector and a voltage reference. The source, a low drift, stable, noise-free signal, is connected to the rear input on the 8000B. The most important aspect of the source is its stability. Reference to the BVD is supplied from a calibrated stable 10 V reference. The source and 8000B are standardized against the calibrated reference for making absolute voltage measurements. The 8000B software automatically tracks the drift of the 10 V reference, whether a 1330A, 732B or 732C is used so that the reference value is always up to date. See the 8000B block diagram.

The DVM detector with an input impedance of 10 GΩ or higher is used to measure the difference between the output of the BVD and the voltage under test. An isolated guard circuit is provided to guard the BVD and the DVM detector when performing measurements. The guard voltage can also be used to drive the guards of the cell enclosures under test to reduce leakage problems.

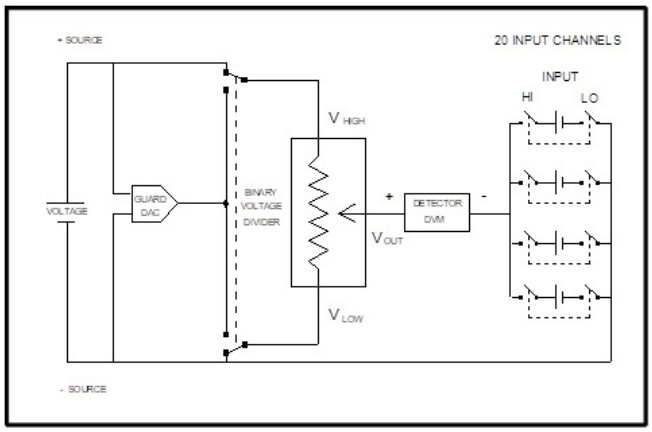

Figure 1. *8000B Block Diagram*

8000B Ratio Verification (RVB)

Figure 2. *RVB*

The model 8000B ratio can be verified by measuring the normal and inverse ratio of two stable resistors using the 8000B Ratio Verification Box (RVB) shown in Figure 2. The RVB contains two high-stability resistors, a low-thermal reversing switch and wiring so that the 8000B can be verified within its linearity specification. The program is built into the software and all measurements and data are stored in the measurement file. The software also performs the calculations of the ratio of the two resistors and the error of the bridge.

Model 8001B 1200 Volt Range Extender

The model 8001B Range Extender extends the measurement range of the model 8000B BVD to 1200 V. All voltages

Figure 3. *Model 8001B*

are calibrated directly against the 10 V reference on the 8000B. The 8001B includes ranges of 10, 30, 120, 300 and 1200 Volts.

The 8001B maintains excellent short-term drift and is self-calibrating using the 8000B BVD. The combination of the two models can be used to calibrate and verify the linearity of both calibrators, DVM's and Volt ratio boxes up to 1200 V.

Applications

The 8000B system is a practical solution to cover several measurements in voltage metrology. The applications that are covered are as follows.

1. Voltage Reference Calibration

The voltage maintenance can be easily carried out by connecting up to 20 reference Zeners to the built-in scanner of the 8000B system. The system can measure any voltage including the commonly used 10 V, 7 V, 1.018 V, and 1 V references.

Figure 4 shows the back panel of the unit, where one can identify the scanner, the source and the detector connectors.

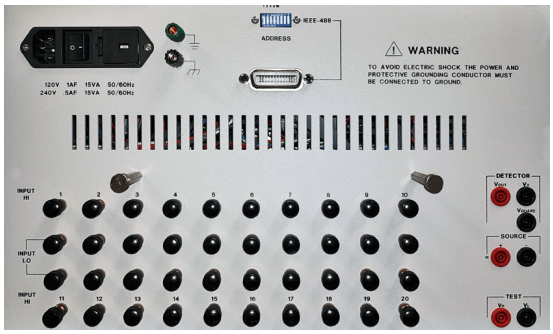

Figure 4. *BVD Back Panel*

The number of devices under test (DUT) can be further increased by an extra 40 channels with one of the MI Matrix Scanner (model 4240A, 4220A, 4210A).

Our software allows easy definition of the measurement tasks to calibrate banks of Zener reference standards.

2. DC Voltage Calibrator for Multi-functional Calibrator

The 8000B enables a complete calibration of the multi-functional calibrator and DMMs (Figure 5). Connecting the 8001B to the 8000B the measurement range is extended up to 1200 V. The bootstrap method guarantees traceability to all ranges, moreover this method provides the best accuracy.

Figure 5. *Calibrator and DVM*

3. Calibration of Volt Ratio Dividers

The 8000B and 8001B combinations are ideal for calibrating Kelvin Varley dividers and other Volt ratio boxes. The 8000B has a V_h and V_l output for supplying 10 V directly to the Kelvin Varley divider. As an option, Volt ratio boxes can be calibrated at full-scale using the 8001B and a calibrator. The output from the Kelvin Varley divider or Volt ratio box is fed directly into one of the 20-channel scanner inputs that are available.

4. Calibration and Linearity of DVM

The pole reversal and the arbitrary selection of test voltages make the 8000B system the practical instrument to calibrate DVMs. The numerous measurement options are fulfilling the EURAMET CG-15 for calibration of DVM and can even extend these requirements. An example of a linearity test is shown in Figure 6.

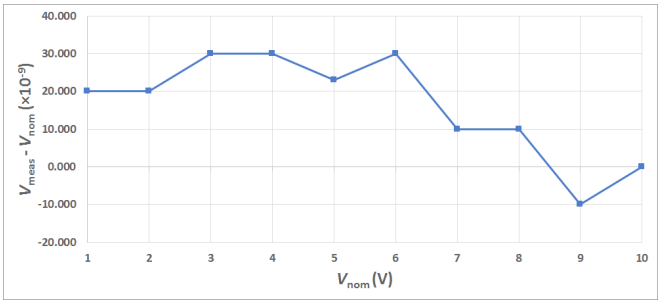

Figure 6. *DVM Linearity Check*

System Software

Measurement International's model 8000B software has been developed by metrologists for metrologists. It features "real-time" uncertainty analysis and graphing

of measurement data (Figure 7). It provides single measurement and total ratios and its uncertainty.

The full system is configurable, to allow the multi-instrumentation connection (via IEEE-488.2). The user can choose among some of the most common calibrators and DVMs, such as Fluke 5720 and Keysight 3458A, however, a user-friendly interface allows the creation of other instrument drivers (Figure 8). Additionally, it is possible to configure the sources needed for measurements.

The program selection window provides all the information to create custom measurements. Several parameters are available to tune to user requirements. The simple drag-and-drop interface helps in the creation of programs to automate long measurement sessions.

The measurement results can be saved for historical and regression analysis. They can be exported to spreadsheet format to quickly report generation.

The software also provides a built-in algorithm to calibrate the 8000B and the 8001B models as shown in Figure 9. The calibration results are automatically used to correct the DUTs measurement. The saved calibration is brought back and displayed with a click of a button. Beside the correction factors and other information, the time stamp is shown.

System Requirements

To run the MI software (model 8000 SW) requires a computer running Windows 7 or later and USB to IEEE-488 interface (not included). Graphing, history logging, and data storage with export to Excel and regression analysis are provided.

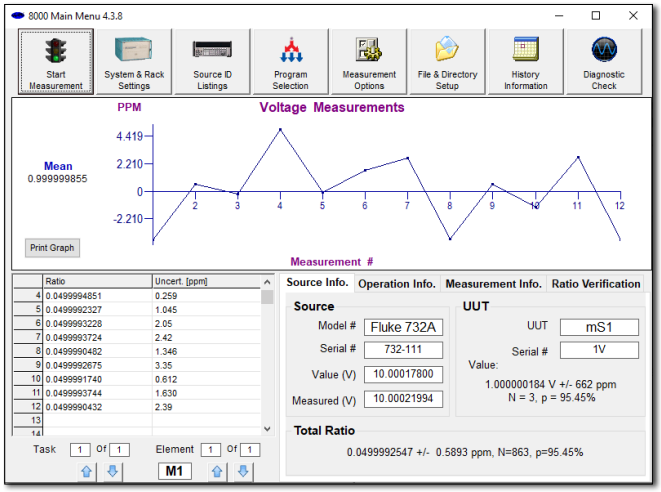

Figure 7. *Voltage Measurement*

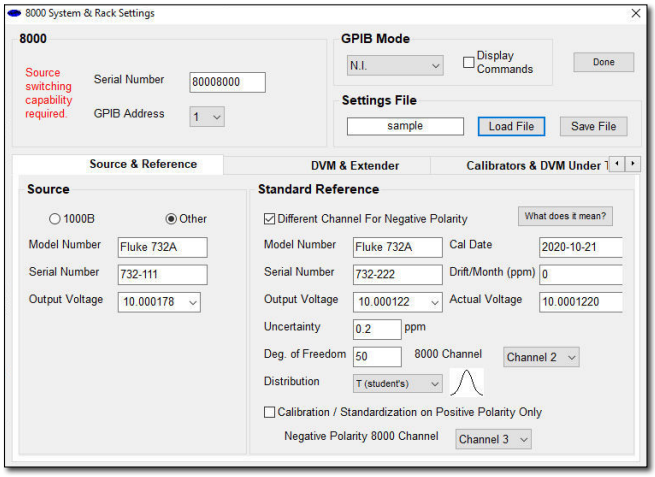

Figure 8. *System and Rack Settings*

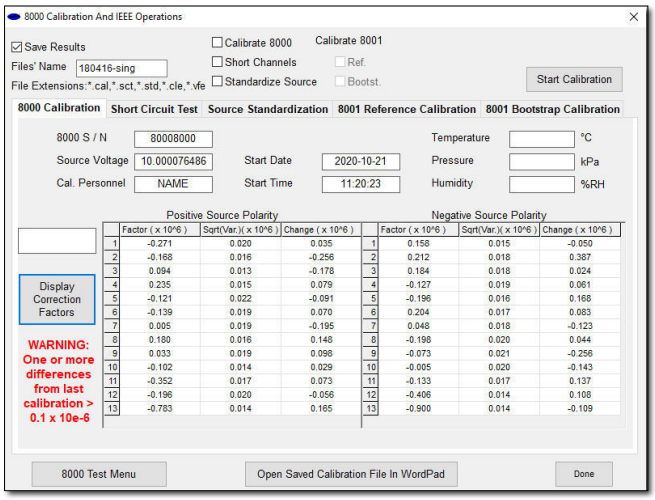

Figure 9. *8000 and 8001 Calibration*

8000B/8001B AUTOMATED POTENTIOMETER BINARY VOLTAGE DIVIDER

Specifications: Rev 3

	8000B	8001B
Automatic Self-Calibration	Completely Self-Checking	Completely Self-Checking
Ranges	1 mV to 10 V (Single Continuous)	30 V, 120 V, 300 V, 1200 V
Accuracy **K=2** *** We have attempted to include all reasonable considerations for our uncertainty budgets but your uncertainty budgets should be re-assessed considering your environment, operating conditions and metrological needs. As this is a ratio device, the results that we show can easily be improved upon.** **** Lower Voltages, e.g. 100 mV, 10 mV, 1 mV the resolution of the DMM (Detector) becomes the dominant uncertainty.**	1 mV < 200×10^{-6} 10 mV < 50×10^{-6} 100 mV < 5×10^{-6} 1 V < 0.5×10^{-6} 10 V < 0.05×10^{-6}	30 V < 0.1×10^{-6} 120 V < 0.2×10^{-6} 300 V < 0.5×10^{-6} 1200 V < 1×10^{-6}
Insulation Resistance	> 10^{11} Ω	> 10^{11} Ω
Effective Linearity	< 0.02 ppm of Full-Scale (Full-scale 1 V, 10 V)	< 0.02 ppm of Full-Scale
Long-Term Drift	N/A – Corrected by Self-Calibration	N/A – Corrected by Self-Calibration
Short-Term Drift	Dependant on Drift of Source and Environmental Conditions	Dependant on Drift of Source and Environmental Conditions
Input Impedance	40 kΩ	4.8 MΩ Maximum
Output Impedance	100 kΩ	40 kΩ
Operating Environment	18 to 34 °C, 10 to 80 % RH	18 to 34 °C, 10 to 80 % RH
Storage Environment	-5 °C to 40 °C, 95 % Non-condensing	-5 °C to 40 °C, 95 % Non-condensing
Warranty	2 Years Parts & Labour	2 Years Parts & Labour

How to Order
1. Model 8000B – Binary Voltage Divider
2. Model 8001B – 1200 V Range Extender

Accessories
8000B Ratio Verification Box
10 V Reference 1330A or 732C
Detector 3458A

Dimensions (L × W × H):
1400 × 940 × 686 (mm)
(Full System)

Weight:
180 kg (Full System)

Shipping Weight:
215 kg (Full System)

Main Power:
100 V_{ac}-240 V_{ac} – 50/60 Hz
10 VA Max. (8000B)
6 VA Max. (8001B)

Corporate Headquarters
Measurements International
PO Box 2359, 118 Commerce Drive
Prescott, Ontario, Canada K0E 1T0

Phone: 613-925-5934
Fax: 613-925-1195
Email: sales@mintl.com

Toll Free: 1-800-324-4988

Worldwide Offices
MI-USA
Phone: 407-706-0328
Email: sales@mintl.com

MI-China
Phone: +(86) 10-64459890
Email: sales@mintl.com

MI-Europe
Phone: +(420) 731-440-663
Email: sales@mintl.com

MI-Japan
Phone: +(81) 72 39 64 660
Email: kaz@mijpn.com

MI-India
Phone: +(91) 98 10 134 932
Email: sales@MILLP.co.in

© Copyright 2020 Measurements International Limited.
All rights reserved.

Form MI 66, Rev. 13, Dated 2020-09-15 (QAP19, App. "N")